GERBER

www.gerberonline.com

ULTRA FLUSH®
1.0 GPF (3.8 LPF)
Elongated Toilet

12″ Rough-In

Features:

☐ UL-20-312

- Vitreous china
- Low Consumption 1.0gpf (3.8 LPF)
- Elongated Bowl
- 12″ Rough-In
- Pressure Vessel Inside
- Dual fed siphon jets
- Fully Powerful, 100% glazed, 2″ trapway
- Non-Sweating insulated tank
- Chrome, Metal Front Tank Lever
- 2 Color Matched Bolt Caps Included
- Toilet seat not included

Technical Information:

Included Components:

☐ Combination	UL-20-312
☐ Bowl	UF-21-372
☐ Tank	UF-28-380

Other Tank Options: (bowl to be purchased separately)

N/A

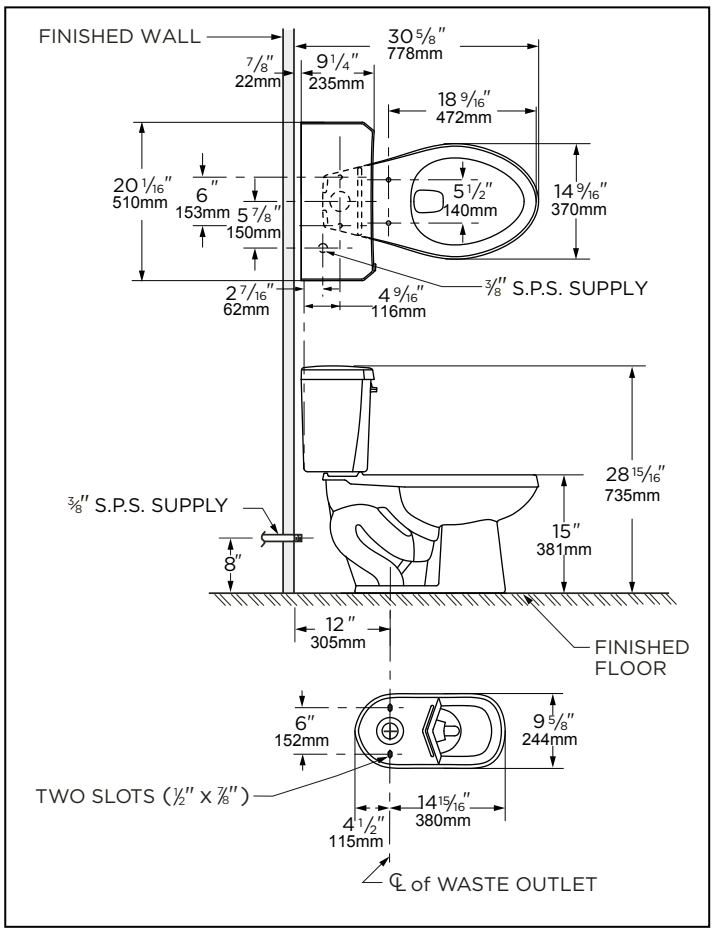

Fixtures:

Configuration	Two-piece, Elgongated Toilet
Water per Flush	1.0 gpf (3.8 lpf)
Rough-In	12″
Height	28 15/16″
Width	20 1/16″
Depth	29 3/4″
Trapway	2″
Large Water Surface	8 11/16″ x 6 5/16″
Shipping Weight	91 lbs

Accessories: (to be purchased separately)

Soft Closed Toilet Seat	99-213

Colors:

- White
- Other: Refer to Price Book for additional colors

Warranty:

- Limited Lifetime Warranty - see website for detailed warranty information

HIGH EFFICIENCY TOILET HET

NOTES: All dimensions are in inches and millimeters. Illustration may not be drawn to scale.

IMPORTANT:
Dimensions of fixtures are nominal and may vary within the range of tolerances established by ASME standard A 112.19.2
THIS FIXTURE QUALIFIES ACCORDING TO ASME TEST PROCEDURES AS A HIGH-EFFICIENCY WATER CLOSET WITH AN AVERAGE CONSUMPTION OF 1.0 gpf (3.8 Lpf) OR LESS.